Series 215 Rotary Actuators

Heavy duty, durable versatile rotary actuators specifically designed for the rigorous requirements of closed-loop servohydraulic testing applications.

Features

- Heavy-duty roller bearings withstand the high radial loads associated with rotational testing, while providing low friction and long life
- Precision machined, non-metallic coated rotor design reduces friction and eliminates backlash that can cause load spikes and disturb loading rates
- Hydrostatic thrust bearings reduce friction for improved closed-loop control and low waveform distortion
- Precision matched rotor-cylinder sets eliminate high-pressure seals, resulting in lower friction and a longer service life
- Port design allows interfacing to servovalves with a wide range of performance characteristics for a broad range of testing applications
- Dynamic torque ratings from 2000 lbf-in. (226 N-m) to 100,000 lbf-in. (11 300 N-m) in six model sizes
- Fatigue rated for cyclic use at rated torque for extended service life
- Standard built-in hydraulic cushions protect the actuator when maximum dynamic displacement conditions occur

Description

Series 215 Rotary Actuators are heavy-duty, torque-generating actuators that operate under precision servovalve control in closed-loop servohydraulic systems. When matched with an appropriate MTS servovalve and transducer, the 215 Actuators are ideally suited for testing materials, axles, couplings, drive-shafts, and other components involving rotational movement. These double-vane actuators are designed for rotational motion and cyclic testing applications.

The maximum static displacement is 100° or ±50°. The maximum dynamic displacement is 90°or ±45° with hydraulic cushions in the last 5° of displacement. A servovalve is manifold-mounted directly to the top of the actuator to minimize the total volume of compressible fluid, thus increasing dynamic performance and control accuracy. The actuator can be mounted in any position or configuration using the optional foot mounting.

Series 215 Rotary Actuator shown with attached Servovalve/Servovalve manifold, flange adapter and foot mounting assembly

Components

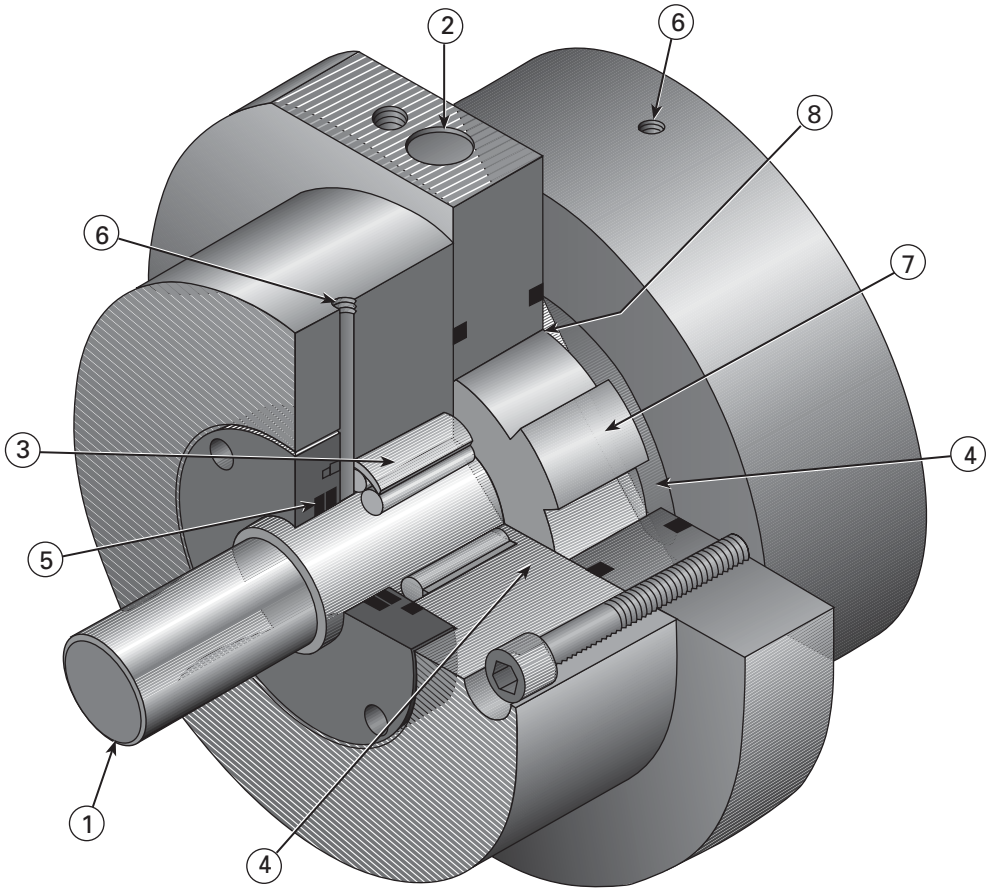

Figure 1. Cutaway Drawing of Typical Model 215 Actuator

The callout numbers in Figure 1 correspond to the numbers of the descriptions below.

1. Precision-machined alloy steel rotor shaft

2. Large ports allow flows up to 50 gpm (189 L/m), inner fluid distributing channels minimize fluid flow restrictions

3. Heavy-duty roller bearings

4. Non-metallic, pressure-balanced thrust bearings

5. Integral low-pressure seal and wiper

6. Drainback ports

7. Non-metallic vane tips

8. Hydraulic cushions provided in the last 5° of rotation

Fixturing Options

There are a variety of options for the Series 215 Rotary Actuators. The following photograph shows a typical test system containing a rotary actuator and the available optional components. Each of the options is described below.

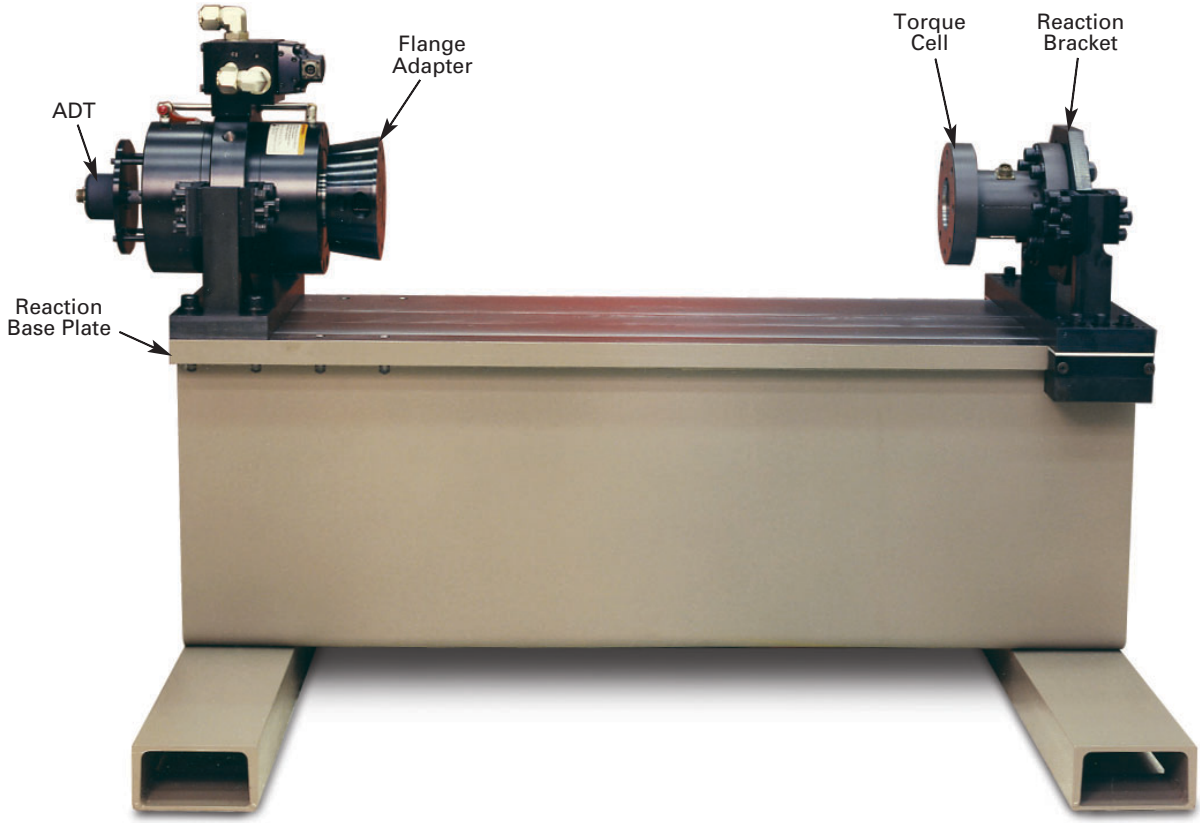

- **Reaction Base** – A reaction base is used with the rotary actuator for two purposes: (1) the machined flat surface and edge ensure accurate alignment at any actuator position; (2) it provides a rigid structure which can react the high torques generated by the rotary actuator.

- **Flange Adapter** – The flange adapter (located behind the diaphragm flexure in the photograph) is secured to the actuator rotor shaft by two concentric lock ring assemblies. It provides a coupling surface between the actuator and the specimen or diaphragm flexure.

- **Diaphragm Flexures** –Diaphragm flexures are used at both ends of the specimen if large axial and angular deflections are generated during testing. If reaction forces exceed stated actuator operating limits, diaphragm flexures help reduce the thrust and side loads reacted by the actuator and test specimen. (not shown)

- **Reaction Bracket** – Reaction brackets attach securely to the reaction base or T-slot table and provide a mounting surface for the torque cell. Each reaction bracket is designed to restrain a specific model torque cell.

- **Torque Cell** – A torque cell provides a precise electrical feedback signal that is proportional to the torque applied to the specimen. For more information on MTS torque cells, refer to the appropriate MTS product specification.

- **ADT** – An angular displacement transducer (ADT) connected to the rear shaft of the actuator produces a DC electrical signal that is proportional to the angular position of the actuator. Rotation of the actuator will generate a feedback signal from the ADT to a transducer conditioner. Rotation is continuous with no reactive torque induced. The ADT is a precision differential capacitor coupled to a solid state oscillator, demodulator, and amplifier to yield DC input/DC output performance.

Specifications

Table 1 lists actuator specifications.
Table 2 lists actuator dimensions and weights.
Letter designations on both tables refer to Figure 2.

Table 1. Actuator Specifications

Model	Dynamic* Torque Rating		Displacement	
	lbf-in.	N-m	in.³/rad	cm³/rad
215.32	2000	226	0.80	13.1
215.35	5000	565	1.9	31.1
215.41	10,000	1130	3.7	60.6
215.42	20,000	2260	7.2	117.9
215.45	50,000	5650	19.0	311.3
215.51	100,000	11,300	38.0	622.7

Model	Maximum Thrust Load (Q)		Maximum Side Load (P)†		Maximum Bending Moment (M)	
	lbf	kN	lbf	kN	lbf	kN
215.32	750	3.3	1500	6.67	3600	405
215.35	750	3.3	3500	15.57	15,400	1732
215.41	750	3.3	3500	15.57	15,400	1732
215.42	750	3.3	3500	15.57	17,300	1946
215.45	1200	5.3	5700	25.36	43,000	4837
215.51	1200	5.3	6500	28.92	50,000	5625

Model	Max. Velocity Cushion Limitation‡§		Rotary Actuator Rotational Inertia¶	
	U.S. Customary rad/sec	SI Metric rad/sec	lbm-in.² J	kg-m² I
215.32	$w = \frac{260}{\sqrt{J}}$	$w = \frac{4.4}{\sqrt{I}}$	11.67	0.00342
215.35	$w = \frac{305}{\sqrt{J}}$	$w = \frac{5.2}{\sqrt{I}}$	18.54	0.00544
215.41	$w = \frac{385}{\sqrt{J}}$	$w = \frac{6.6}{\sqrt{I}}$	20.23	0.00594
215.42	$w = \frac{840}{\sqrt{J}}$	$w = \frac{14.4}{\sqrt{I}}$	29.04	0.00852
215.45	$w = \frac{970}{\sqrt{J}}$	$w = \frac{16.6}{\sqrt{I}}$	171	0.0500
215.51	$w = \frac{1525}{\sqrt{J}}$	$w = \frac{26.1}{\sqrt{I}}$	284	0.0831

* *Actuator is designed for cyclic use at rated torque: rated at maximum differential pressure at 3000 psi (21 MPa).*

† *P and M are interdependent: if P is at maximum, M must be zero; if P = 75% of maximum, M may be up to 25% of its maximum value.*

‡ *If these values are to be exceeded, additional internal or external cushions are required, contact MTS.*

§ *w = rotational velocity in rad/sec and J or I = rotational inertia in lbm-in.² or kg-m² including inertias from rotary actuator, flange, flexure, and 1/2 of test specimen (lbm = pounds mass).*

¶ *Does not include flange adapter.*

Specifications are subject to change without notice. Contact MTS for verification of specifications critical to your needs.

Table 2. Actuator Dimensions and Weights

Model	A		B		C		D		E	
	in.	mm	in.	mm	in.	mm	in.	mm	in.	mm
215.32	1.50	38.1	7.875	200.0	10.00	254	1.175	29.8	3.130	79.5
215.35	2.251	57.1	7.875	200.0	10.00	254	2.275	57.8	3.130	79.5
215.41	2.251	57.1	7.875	200.0	10.00	254	2.275	57.8	3.130	79.5
215.42	2.251	57.1	7.875	200.0	10.00	254	3.275	83.2	3.130	79.5
215.45	3.751	95.3	9.875	250.8	12.25	311	2.775	74.5	4.137	105.1
215.51	3.751	95.3	9.875	250.8	12.25	311	5.553	141.0	4.137	105.1

Model	F		G		H		K		Weight	
	in.	mm	in.	mm	in.	mm	in.	mm	lb	kg
215.32	2.50	63.5	9.000	228.6	1.000	25.4	0.406	10.3	100	45
215.35	2.50	63.5	9.000	228.6	1.000	25.4	0.406	10.3	130	59
215.41	2.50	63.5	9.000	228.6	1.000	25.4	0.406	10.3	130	59
215.42	2.99	75.9	9.000	228.6	1.000	25.4	0.406	10.3	150	70
215.45	3.49*	88.6*	11.000	279.4	1.000	25.4	0.656	16.7	270	125
215.51	5.12*	130.0*	11.000	279.4	1.000†	25.4†	0.656	16.7	365	165

** Contains a 0.12 in. (3.0 mm) shoulder that is 0.01 in. (0.25 mm) larger in diameter than Dimension 'A'.*
† 215.51 pattern has more bolt holes, not evenly spaced.

Dimensions and weights are subject to change without notice. Contact MTS for dimensions and weights critical to your needs.

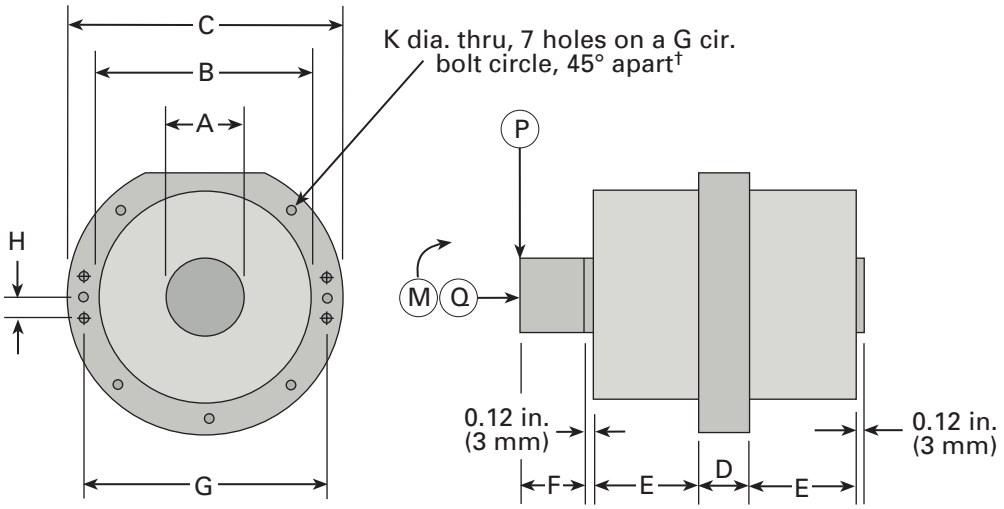

Figure 2. Actuator Dimensional Drawing

Test Setup Considerations

In applying 215 Actuators to particular applications, actuator performance and torque rating as well as the effects of thrust and side loads and rotational inertia must be considered. *Actuator damage and reduced service life can result from neglecting these forces. In some cases, invalid test data can also result.* Described below are formulas and sample calculations for defining these parameters.

Actuator Performance and Torque Rating

Large rotational inertias and higher operating frequencies require large angular accelerations and may limit actuator performance. For a given rotational inertia (J (lbf-in.^{2}) or I (kg-m^2) from Figure 6), operating frequency (f in H_Z), and double amplitude displacement (θ_{DA} in degrees), the torque (T) required to generate sinusoidal performance will be:

$$T\ (\text{lbf-in.}) = \frac{J\ \theta_{DA}\ f^2}{1121}$$

or

$$T\ (\text{N-m}) = \frac{I\ \theta_{DA}\ f^2}{2.903}$$

If this torque exceeds or approaches the torque rating of the actuator as given in the Specifications section, consider ordering the next larger size.

Thrust and Side Loads

Flexures and a torsionally rigid reaction base should be used to prevent excessive thrust and side loads due to specimen windup, misalignment, temperature effects, reaction base twist, etc. Operating the actuator with any significant thrust or side loads increases static and dynamic friction, reducing the overall life of the actuator bearings and inducing possibly undesirable loads into the specimen. The flexures and rigid reaction base are recommended even when the actuator has sufficient thrust and side load capabilities. Due to the bending moment limitations of flexures, however, they *cannot* be used when testing shafts which have C.V. joints or U- joints at angles, or mechanisms which convert rotary to linear motion.

Thrust Load Example

Thrust loads are caused by several conditions: specimen shortening as it is twisted, lengthening as it is heated, and sometimes initial misalignment when the specimen is installed. Splines on the end of a shaft will only ensure zero thrust load at zero torque.

Except for intentional off-center loads (which usually require special fixturing), thrust and side loads are caused by restraining the natural motion of the specimen. For example, suppose a 1-inch-diameter steel shaft 50 inches long warms up by 40°F. The shaft will expand by 0.013 inch, applying a thrust load on the actuator of 6000 pounds. Now suppose there is a flexure between the shaft and the actuator having a stiffness of 6000 pounds per inch and a maximum force rating of 200 pounds. The 0.013 inch expansion moves the flexure and exerts an 80 pound (6000 x 0.013) thrust load on the flexure and actuator.

Side Load Example

Side loads may be caused by initial specimen misalignment. They may also result from eccentricity due to twist of the fixturing. This eccentricity results in an offset between center lines of the actuator and torque cell. The side load imposed on the actuator depends on the bending stiffness of the specimen. A torsionally rigid reaction base and flexures on both the rotary actuator and torque cell will reduce side loads to a practical minimum. Figures 3 and 4 illustrate the various forces exerted as a result of reaction base twist, excluding thrust loading from contraction or expansion. The examples that follow will show that an apparently stiff reaction base can exert large side loads on the rotary actuator as well as significant bending stresses on the test specimen.

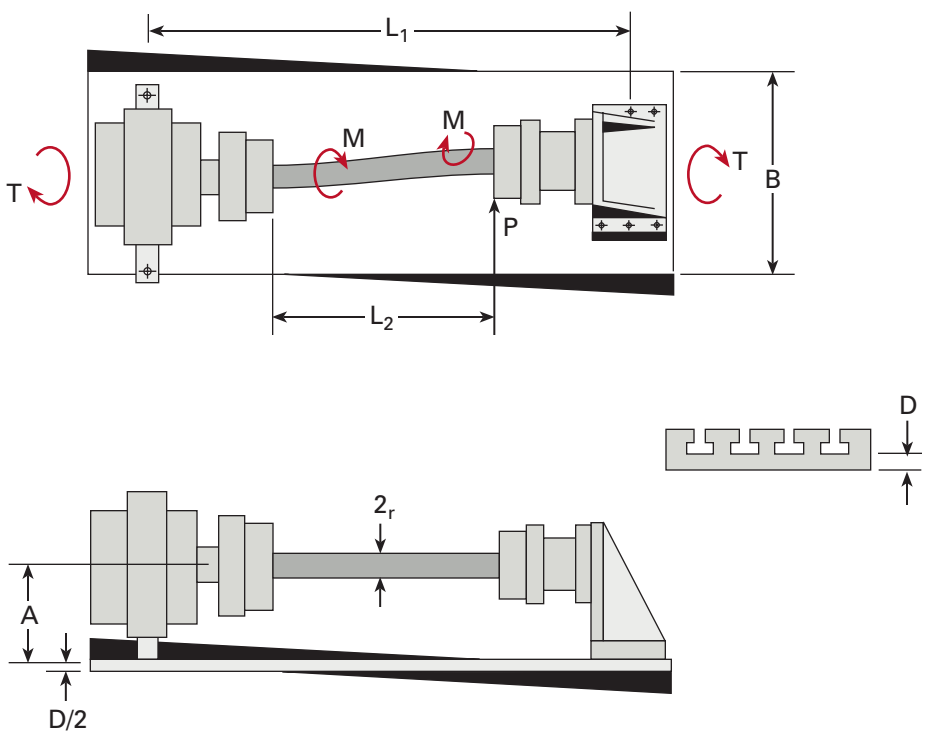

Figure 3. Forces Resulting from Base Plate Twisting (No Flexures)

Case A: No Flexures

Figure 3 illustrates an example of a test setup having no flexures. The parameters that apply to this figure and to the calculations that follow are defined below.

Parameters

P = the load imposed on the test specimen and actuator resulting from reaction base twist (lbf): $P = \dfrac{\frac{k_2}{k_1}(a)(T)}{1 + \frac{k_2}{k_1}(a^2)}$

k_1 = torsional stiffness of a thin flat plate (lbf-in./rad): $k_2 = \dfrac{12\,E_T I}{L_2^3}$

E_S = specimen modulus of elasticity, shear (psi)

b = reaction base width (in.)

d = reaction base thickness, excluding depth of T-slot (in.)

b = 0.333 - (0.21 d/b)

L_1 = length of reaction base subjected to twisting (in.)

a = distance from actuator's centerline to the top of reaction base or to the bottom of the slots in a T-slot table (in.)

T = applied torque (lbf-in.)

k_2 = lateral stiffness of a solid cylindrical test specimen (lbf/in.): $k_2 = \dfrac{12\,E_T I}{L_2^3}$

E_T = specimen modulus of elasticity, tension (psi)

I = moment of inertia for a round solid (in.^{4}): $I = \dfrac{\pi r^4}{4}$

r = specimen radius (in.)

M = bending moment on test specimen (lbf-in.): $M = \dfrac{PL_2}{2}$

L_2 = specimen length (in.)

S_B = the bending stress on the specimen due to reaction base twisting (psi). This parameter is determined by the customer and is dependent on test setup and type of specimen.

$$S_B = M\,r/I$$

Calculations

Using the preceding formulas, calculate P and compare P to the actuator's side load rating in Table 2. If P exceeds or approaches the side load rating, two flexures must be used in the test setup.

Also calculate S_B. If S_B is above the determined maximum tolerable value, two flexures must be used in the test setup.

Example: Suppose a Model 215.45 Rotary Actuator is mounted to a T-slotted steel reaction base, resulting in the following parameters:

Base: 48 in. x 24 in. x 6 in.
T-slot depth: 2 in.
Actuator centerline height (a): 7.75 in.
Actuator torque capacity: 50,000 lbf-in.
Length of base subjected to twisting (L_1): 37 in.
Specimen material: Steel ($E_s = 12 \times 10^6$, $E_T = 29 \times 10^6$)
Specimen length: 10 in.
Specimen radius: 1 in.
To calculate P, it is first necessary to calculate k_1, d, b, k_2, I, a, and T as follows:

$$k_1 = \frac{E_S\, bd^3}{L_1}$$

$$d = 6 - 2 = 4$$

$$b = 0.333 - 0.21\,(4/24) = 0.298$$

$$k_1 = \frac{(12 \times 10^6)\,(0.298)\,(24)\,(4^3)}{37} = 148.5 \times 10^6 \text{ lbf-in./rad}$$

$$k_2 = \frac{12\, E_T I}{L_2{}^3}$$

$$I = \pi\, 1^4/4 = 0.7854 \text{ in.}^4$$

$$k_2 = \frac{(12)\,(29 \times 10^6)\,(0.7854)}{10^3} = 273.3 \times 10^3 \text{ lbf/in.}$$

$$a = 7.75 + 2 + 4/2 = 11.75 \text{ in.}$$

$$T = 50{,}000 \text{ lbf-in.}$$

$$P = \frac{\frac{k_2}{k_1}\,(a)\,(T)}{1 + \frac{k_2}{k_1}\,(a^2)} = \frac{\frac{273.3 \times 10^3}{148.5 \times 10^6}\,(11.75)\,(50{,}000)}{1 + \frac{273.3 \times 10^3}{148.5 \times 10^6}\,(11.75)^2} = 862 \text{ lbf}$$

$$M = \frac{PL_2}{2} = \frac{(862)\,(10)}{2} = 4310 \text{ lbf-in.}$$

For this example, P = 862 or 12% of side load capacity, and M = 4310 or 10% of bending moment capacity. The sum is less than 100% at capacity, so flexures are not necessary.

The final step is the calculation of S_B:

$$S_B = M\ r/I = \frac{(4310)\,(1)}{0.7854} = 5488 \text{ psi}$$

The value 5488 psi represents the amount of stress experienced by the specimen under test. Typically, in a torsion test, stress caused by reaction base or T-slot table twist should be zero or as close to zero as possible. In the sample calculation, the excessive specimen stress loading introduces unfavorable loads on the test specimen which can invalidate the test results or cause premature failure of the specimen. To reduce these loads requires the use of flexure options or a stiffer mounting surface.

Case B: Flexure in the Foot Mounting and Reaction Bracket (Standard Configuration)

Figure 4 shows an example of a test setup in which flexures are provided on both the optional actuator foot mounting and the optional reaction bracket. Parameters *not* previously defined in Case A are defined below.

Parameters

Δ = centerline offset between actuator and reaction bracket mountings due to twisting of the reaction base plate (in.):

$$\Delta = Ta/k_1$$

θ = the angle of flex imposed on the actuator and reaction bracket flexures (rad):

$$\theta = \Delta/L_1$$

M_{F1} = the maximum horizontal bending capacity of the flexures (lbf-in.)

θ_{F1} = the maximum horizontal angular deflection of the flexures (rad)

k_{F1} = the horizontal stiffness of the actuator and reaction bracket flexures (lbf-in./rad):

$$k_{F1} = M_{F1}/\theta_{F1}$$

$M_1 = k_{F1}\theta$

$M_2 = (M_1)(L_2/L_1)$

$S_B = (M_2)(r/I)$

Calculations

Using the formulas above, calculate Δ and then θ. If θ is not greater than θ_{F1}, the flexures are adequate (from Tables 5 and 6, θ_{F1} = K).

Calculate S_B, using M_2, and determine if it is within acceptable limits for the specific test.

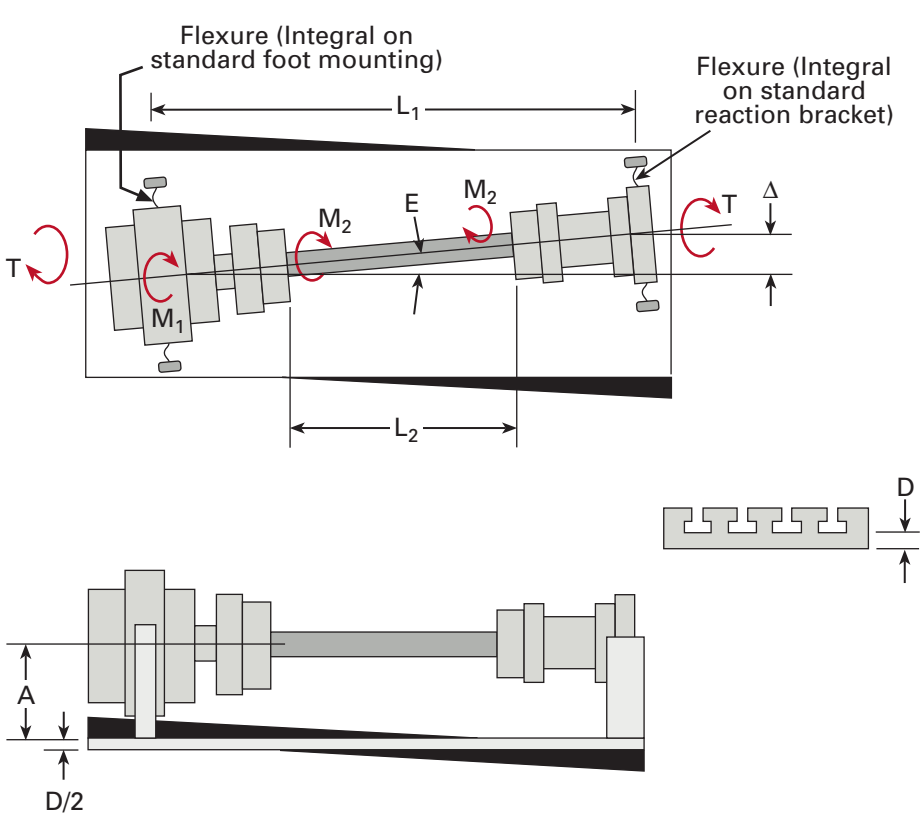

Figure 4. Forces Resulting from Base Plate Twisting (Integral Flexure)

Case C: Diaphragm Flexures at Ends of Specimen

Figure 5 shows an example of a test setup in which diaphragm flexures are mounted at both ends of the test specimen. These would be required on test setups where both the rotary actuator and the reaction bracket are rigidly mounted to the reaction base. Parameters not previously defined in Cases A and B are defined below.

L_F = the distance between flexing points of the diaphragm flexures (in.)

θ = the angle of flex imposed on each diaphragm flexure (rad): $\theta = \Delta/L_F$

M_{F2} = the maximum lateral bending capacity of the diaphragm flexure (lbf-in.)

θ_{F2} = the maximum angular deflection of the diaphragm flexure (rad)

k_{F2} = the lateral stiffness of the diaphragm flexures (lbf-in./rad): $k_{F2} = M_{F2}/\theta_{F2}$

$M = k_{F2}\theta$

$S_B = M\ r/I$

Calculations

Using the preceding formulas, calculate Δ and then θ. If θ is not greater than θ_{F2}, the flexures are adequate (from Table 7, $\theta_{F2} = M$).

Calculate S_B and determine if it is within acceptable limits for the specific test.

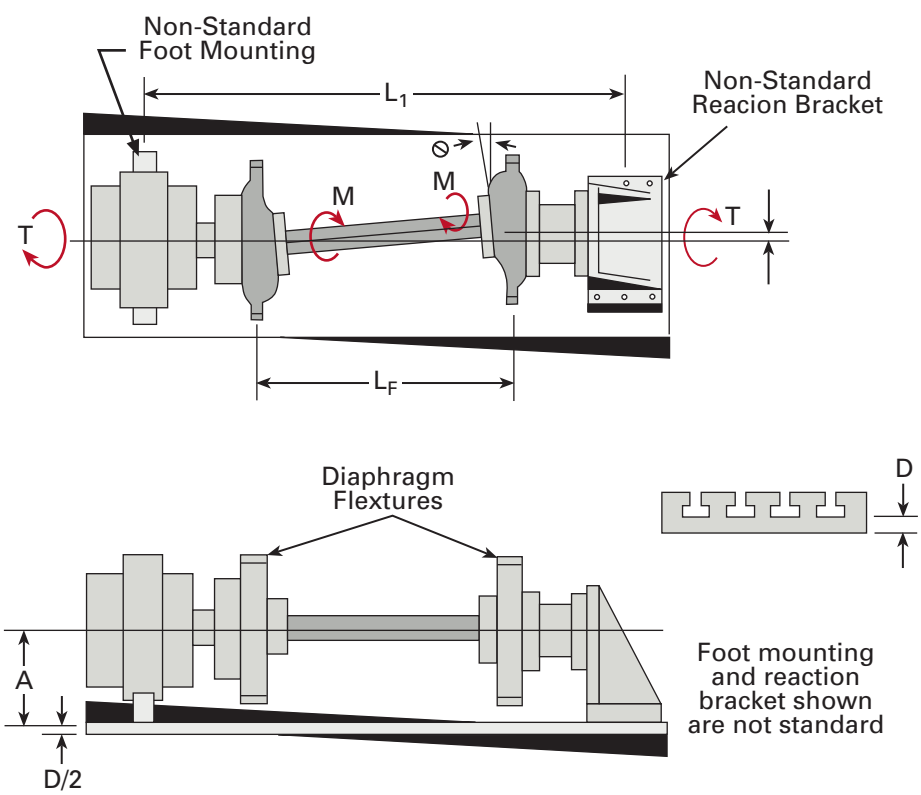

Figure 5. Forces Resulting from Base Plate Twisting (Diaphragm Flexures)

Recommendations

In almost all cases, some type of flexure is required on each end of the test specimen. First determine the deflections arising from reaction base twist and specimen length changes from heating, cooling, and twisting. Check these deflections against the angular and axial deflection capabilities of the flexures chosen. If the flexures are inadequate, either modification or additional flexures will be necessary to reduce the loads. MTS-designed reaction bases are rigid enough that, when used with the foot mounting and reaction bracket options, side loads on the actuator are well below the allowed maximum. A calculation of axial deflections should still be made and checked against the foot mounting and reaction bracket. An additional diaphragm flexure or flexures may be required just to accommodate a large axial deflection. Refer to the Options section.

Rotational Inertia

External or internal cushions must be used to limit angular travel when substantial inertial loads are imposed.

High rotational speeds and/or large-diameter flexures and specimens can cause large torques even though the masses involved are quite small. Such inertial loads can damage the actuator if shaft rotation is suddenly stopped by the vane abutments. Table 3 lists the maximum allowable rotational inertia values in both U.S. Customary and SI metric units for each rotary actuator/servovalve combination. If the ratings are likely to be exceeded, specially designed cushions should be built for the application. Contact MTS.

The maximum J from Table 3 includes inertias from the rotary actuator, flange, flexure, and one-half of the test specimen. Refer to Figure 6 for rotational inertia calculations (J for U.S. customary; I for SI metric). For J in lbm-in2, r is in inches and m (mass) is in pounds. For I in kg-m2, r is in meters and m is in kilograms.

Table 3. Maximum Allowable Rotational Inertia (J) when using only Internal Actuator Rotor Vane Stops

U.S. Customary

Model	Servovalve Flow		Max J for Actuator Model (lbm-in.²)					
	Rated (gpm)	Peak* (gpm)	215.32	215.35	215.41	215.42	215.45	215.51
252.23	5.00	9	39	302	1825	32905	305558	3020992
252.24	10.00	17	--	76	456	8226	76389	755248
252.25	15.00	26	--	34	203	3656	33951	335666
252.31	25.00	43	--	--	73	1316	12222	120840
256.04	40.00	70	--	--	--	514	4774	47203
256.09	90.00	156	--	--	--	--	943	9324

SI Metric

Model	Servovalve Flow		Max J for Actuator Model (Kg-m²)					
	Rated (L/min)	Peak* (L/min)	215.32	215.35	215.41	215.42	215.45	215.51
252.23	19.00	33	0.01	0.09	0.54	9.67	89.49	884.89
252.24	37.00	64	--	0.02	0.13	2.42	22.37	221.22
252.25	56.00	97	--	0.01	0.06	1.07	9.94	98.32
252.31	93.00	161	--	--	0.02	0.39	3.58	35.40
256.04	151.00	262	--	--	--	0.15	1.40	13.83
256.09	340.50	589	--	--	--	--	0.28	2.73

* *Flow through the valve at 3,000 psi (ΔP). Using reduced system pressures (ΔP) will decrease peak flow Q peak = Q rated* $\sqrt{\frac{\Delta P}{1000}}$. *Decreasing peak flow will allow an increase in acceptable inertia (J). Refer to Table 1 for the maximum velocity into vane stops where W=* $\frac{\text{Q peak x 3.85 in.}^3/\text{sec}}{\text{Displacement in.}^3/\text{rad}}$.

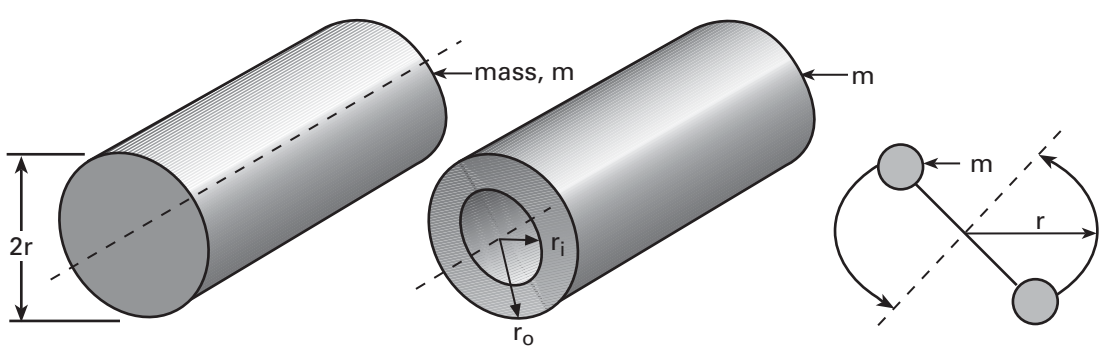

J (or I) = (1/2) m r^2 J (or I) = (1/2) m (r_i^2+r_o^2) J (or I) = 2 m r^2

Figure 6. Rotational Inertia Calculations

Options

The most common options available for use with the Series 215 Rotary Actuators are described below.

Foot Mounting

The foot mounting option is used for easy attachment of the actuator to a reaction base and also provides some flexure capability. Table 4 lists foot mounting dimensions and certain important force and deflection ratings. Letter designations refer to Figure 7.

Reaction Brackets

Reaction brackets provide a torsionally rigid connection between the torque cell and the reaction base. Brackets provide some flexural capability and readily accept MTS torque cells. Table 5 lists bracket dimensions. Letter designations refer to Figure 8.

Reaction Bases

Reaction bases are constructed of heavy-duty steel and designed for high torsional stiffness. They readily accept MTS rotary actuators and reaction brackets. When used with MTS reaction brackets and foot mounting options, the stiffness/flexural capability is adequate to prevent excessive actuator side loads. (However, a review of thrust loads should be made.) When purchased as a system, the specimen length is fully adjustable (within the specified limits) without requiring realignment of the actuator and reaction bracket. If required, legs are available to raise the bases to any specified height. Table 6 lists reaction base dimensions, weights, and torsional stiffnesses.

Table 4. Foot Mounting Dimensions and Ratings

Model	A		B		C		D		E		F	
	in.	mm	in.	mm	in.	mm	in.	mm	in.	mm	in.	mm
215.32	6.25	158.8	0.75	19	5.00	127	17.00	432	12.00	304.8	3.75	92.3
215.35	6.25	158.8	0.75	19	5.00	127	17.00	432	12.00	304.8	3.75	92.3
215.41	6.50	166.4	1.00	25	5.00	127	19.50	495	18.00	457.2	3.50	88.9
215.42	6.50	166.4	1.00	25	5.00	127	19.50	495	18.00	457.2	3.50	88.9
215.45	7.75	196.8	1.50	38	6.00	152	22.00	559	18.00	457.2	4.00	101.6
215.51	7.75	196.8	1.50	38	6.00	152	22.00	559	18.00	457.2	4.00	101.6

Model	G		Thrust Load* H (Maximum)		Thrust Deflection I (Maximum)		Horizontal Bending Moment* J (Maximum)		Angular Deflection K	Vertical* Bending Moment L (Maximum)		Angular Deflection M
	in.	mm	lbf	N	in.	mm	lbf-in.	N-m	rad	lbf-in.	N-m	rad
215.32	0.781	19.8	100	445	0.03	0.76	200	22	0.004	4500	508	0.003
215.35	0.781	19.8	100	445	0.03	0.76	200	22	0.004	4500	508	0.003
215.41	0.781	19.8	150	670	0.07	1.8	400	45	0.008	9000	1000	0.003
215.42	0.781	19.8	150	670	0.07	1.8	400	45	0.008	9000	1000	0.003
215.45	0.781	19.8	500	2200	0.06	1.5	2000	225	0.006	20,000	2260	0.0008
215.51	0.781	19.8	500	2200	0.06	1.5	2000	225	0.006	35,000	3960	0.0004

* *Thrust load (H) and bending moments (J and L) are interdependent. H ratings assume J = 0 and L = 0. J and L ratings assume H = 0. Ratings must be decreased in proportion to other loads present, e.g., if H = 75% of rating, J and L must not total 25% of rating.*

Dimensions and ratings are subject to change without notice. Contact MTS for verification of critical dimensions and ratings.

Table 5. Reaction Bracket Dimensions and Ratings

Model	A		B		C		D		E		F	
	in.	mm	in.	mm	in.	mm	in.	mm	in.	mm	in.	mm
215.32	6.25	158.8	0.75	19	5.00	127	17.00	432	12.00	304.8	3.75	92.3
215.35	6.25	158.8	0.75	19	5.00	127	17.00	432	12.00	304.8	3.75	92.3
215.41	6.50	166.4	1.00	25	5.00	127	19.50	495	18.00	457.2	3.50	88.9
215.42	6.50	166.4	1.00	25	5.00	127	19.50	495	18.00	457.2	3.50	88.9
215.45	7.75	196.8	1.50	38	6.00	152	22.00	559	18.00	457.2	4.00	101.6
215.51	7.75	196.8	1.50	38	6.00	152	22.00	559	18.00	457.2	4.00	101.6

Model	G		Thrust Load* H (Maximum)		Thrust Deflection I (Maximum)		Horizontal Bending Moment* J (Maximum)		Angular Deflection K	Vertical* Bending Moment L (Maximum)		Angular Deflection M
	in.	mm	lbf	N	in.	mm	lbf-in.	N-m	rad	lbf-in.	N-m	rad
215.32	0.781	19.8	100	445	0.03	0.76	200	22	0.004	3500	395	0.003
215.35	0.781	19.8	100	445	0.03	0.76	200	22	0.004	3500	395	0.003
215.41	0.781	19.8	150	670	0.07	1.8	400	45	0.008	9000	1000	0.003
215.42	0.781	19.8	150	670	0.07	1.8	400	45	0.008	9000	1000	0.003
215.45	0.781	19.8	500	2200	0.06	1.5	2000	225	0.006	20,000	2260	0.0012
215.51	0.781	19.8	500	2200	0.06	1.5	2000	225	0.006	35,000	3960	0.0012

* *Thrust load (H) and bending moments (J and L) are interdependent. H ratings assume J = 0 and L = 0. J and L ratings assume H = 0. Ratings must be decreased in proportion to other loads present, e.g., if H = 75% of rating, J and L must not total 25% of rating.*

Dimensions and ratings are subject to change without notice. Contact MTS for verification of dimensions and ratings critical to your needs.

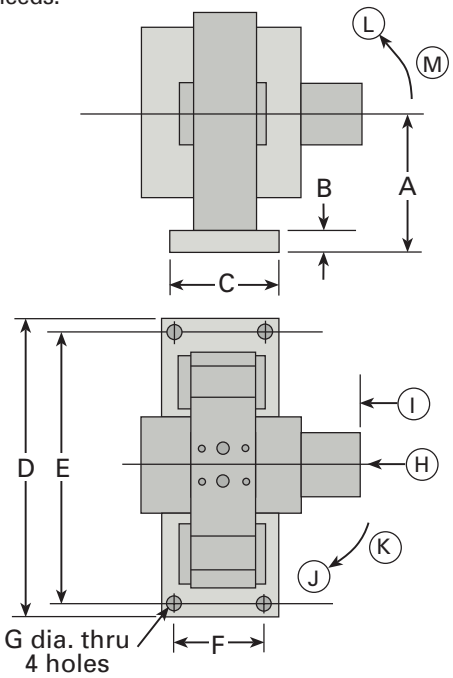

Figure 7. Foot Mounting Specification Drawing

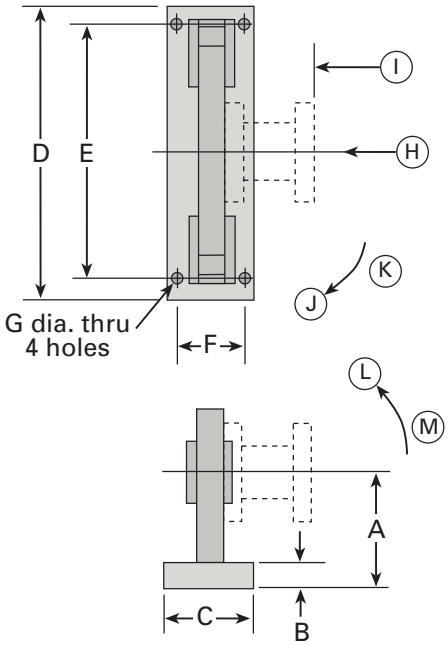

Figure 8. Reaction Bracket Specification Drawing

Table 6. Reaction Base Dimensions and Ratings

Model	Length§		Width		Height*		Maximum Space†	
	in.	mm	in.	mm	in.	mm	in.	mm
215.32	45	1143	15	380	4.7	120	28.50	724
215.35	45	1143	15	380	4.7	120	28.00	711
215.41	54	1370	22	560	5.7	144	33.50	851
215.42	54	1370	22	560	5.7	144	29.75	756
215.45	60	1525	22	560	20	508	34.50	876
215.51	60	1525	22	560	20	508	30.25	768

Model	Weight		Torsional Stiffness‡	
	lb	kg	lbf-in./rad	N-m/rad
215.32	375	170	55 x 106	6.2 x 106
215.35	375	170	55 x 106	6.2 x 106
215.41	800	363	122 x 106	13.7 x 106
215.42	800	363	122 x 106	13.7 x 106
215.45	1125	510	742 x 106	83.8 x 106
215.51	1125	510	742 x 106	83.8 x 106

* *Without legs.*

§ *Longer bases available on request.*

† *Maximum space between mounting surfaces of actuator output flange and torque cell (with the MTS reaction bracket supporting the torque cell).*

‡ *Torsional stiffness over entire length. Stiffness increases proportionately as the actuator and reaction bracket are moved toward each other.*

Dimensions and ratings are subject to change without notice. Contact MTS for verification of dimensions and ratings critical to your needs.

Special Cushions and Porting for Flows Greater Than 50 GPM (189 L/m)

The standard Series 215 Rotary Actuator can accept servovalves with the flow ratings shown in Table 3. Optional porting and cushions can be provided to accommodate greater flow requirements. Contact MTS for information on special flow requirements.

Diaphragm Flexures

As described in the Test Setup Considerations section, one or two diaphragm flexures are used when large thrust and side loads are encountered on test setups having both the rotary actuator and the reaction bracket rigidly mounted to the reaction base. The flange adapter option is required to attach the diaphragm flexure to the actuator. The flexure attaches readily to torque cells. The rotational inertia of the diaphragm flexure must be included when determining the actuator performance.

Table 7 lists flexure dimensions and certain important force and deflection ratings. Letter designations refer to Figure 9.

Table 7. Diaphragm Flexure Dimensions and Ratings

Model	A		B		C		D	E		F		G	
	in.	mm	in.	mm	in.	mm	Thread Size	in.	mm	in.	mm	in.	mm
215.32	4.00	101	9.75	248	2.00	51	5/16-18	0.88	22	0.344	8.7	0.41	10
215.35	5.00	127	9.75	248	2.00	51	3/8-16	0.86	22	0.406	10.3	0.40	10
215.41	5.00	127	12.25	311	2.03	52	3/8-16	0.89	23	0.406	10.3	0.42	11
215.42	8.00	203	12.25	311	2.93	74	5/8-11	1.33	34	0.656	16.6	0.39	10
215.45	8.00	203	15.25	387	2.99	76	5/8-11	1.36	35	0.656	16.6	0.42	11
215.51	9.75	248	15.25	387	3.49	89	3/4-10	1.62	41	0.781	19.8	0.42	11

Model	H		Thrust Load[1] J (Maximum)		Deflection K (Maximum)		Bending Moment[1] L (Maximum)		Angular Deflection M	Rotational Inertia	
	in.	mm	lbf	N	in.	mm	lbf-in.	N-m	rad	lbm-in.	kg-m
215.32	3.25	82.55	100	450	0.15	3.81	100	11.3	0.028	85	0.0249
215.35	4.25	107.95	100	450	0.15	3.81	100	11.3	0.025	95	0.0278
215.41	4.25	107.95	150	670	0.15	3.81	100	11.3	0.025	210	0.0614
215.42	6.50	165.10	150	670	0.17	4.32	300	33.9	0.015	460	0.135
215.45	6.50	165.10	500	2200	0.25	3.81	400	45.2	0.015	960	0.281
215.51	8.00	203.20	500	2200	0.15	3.81	400	45.2	0.015	1400	0.410

Dimensions and ratings are subject to change without notice. Contact MTS for verification of dimensions and ratings critical to your needs.

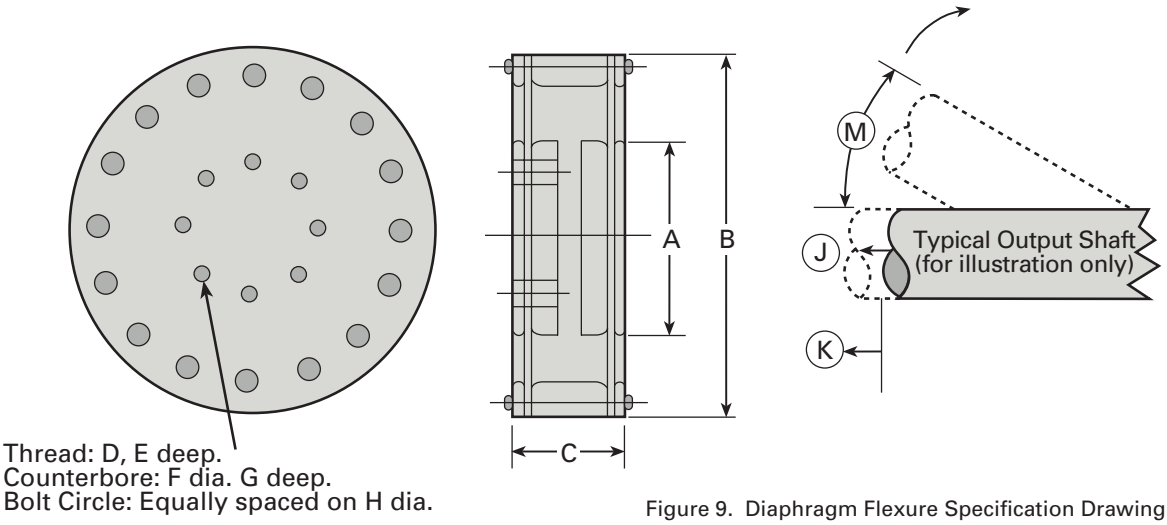

Figure 9. Diaphragm Flexure Specification Drawing

Flange Adapters

A flange adapter may be used to mount the specimen to the actuator. The actuator shaft may extend beyond the adapter, be flush with it, or be recessed into it. Diameter A (shown in Figure 10) may be used as a shallow pilot.

Table 8 lists adapter dimensions and inertia. Letter designations refer to Figure 10.

Table 8. Flange Adapter Dimensions and Inertia

Model	A		B		C		D	
	in.	mm	in.	mm	in.	mm	in.	mm
215.32	1.5000	38.1	4.00	102	2.25	57	2.99	75.9
215.35	2.2511	57.2	5.00	127	2.25	57	2.99	75.9
215.41	2.2511	57.2	5.00	127	2.00	51	2.99	75.9
215.42	2.2511	57.2	8.00	203	2.00	51	2.99	75.9
215.45	3.7400	95.0	8.00	203	3.25	83	3.68	93.5
215.51	3.7400	95.0	9.75	248	4.88	124	5.31	134.9

Model	E	F		G		Rotational Inertia	
	Thread Size	in.	mm	in.	mm	lbm-in.^{2}	kg-m^2
215.32	5/16-18	0.63	16.0	3.25	82.5	14.4	0.00421
215.32	3/8-16	0.75	19.1	4.25	107.9	21.8	0.00639
215.41	3/8-16	0.75	19.1	4.25	107.9	21.8	0.00639
215.42	5/8-11	0.75	19.1	6.50	165.1	208	0.0608
215.45	5/8-11	1.25	31.8	6.50	165.1	273	0.0799
215.51	3/4-10	1.50	38.1	8.00	203.2	737	0.216

Dimensions are subject to change without notice. Contact MTS for verification of dimensions critical to your needs.

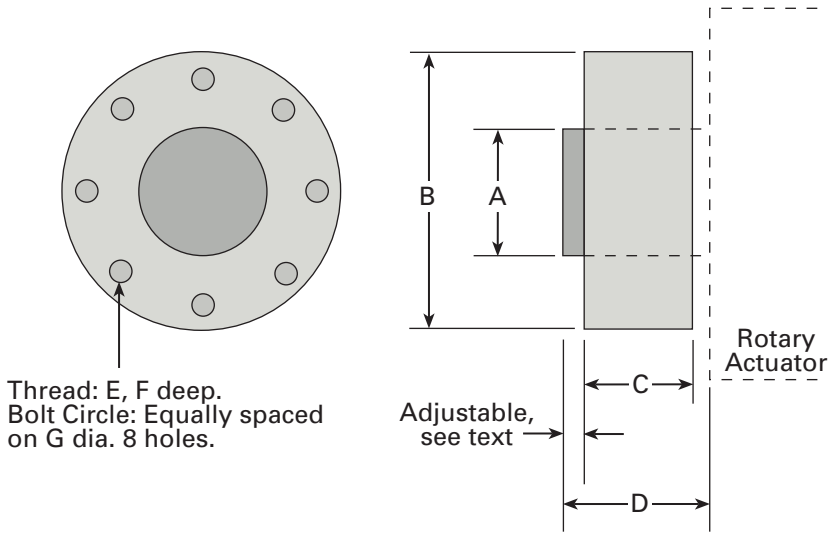

Figure 10. Flange Adapter Dimension Drawing

Angular Displacement Transducer (ADT)

The ADT is a DC transducer that produces a voltage that is directly proportional to the angular position of the Rotary Actuator rotor shaft. The ADT connects to the rear shaft of the actuator via a flexible coupling and extends approximately 8 in. (200 mm) from the actuator body.

A modified MTS DC transducer conditioner is required due to the high-level ADT output. Linearity of the ADT is ±0.3% of full range (120°). (Maximum Series 215 Actuator rotation is 100°.)

Special Application Rotary Actuators

MTS manufactures rotary actuators designed for use in special rotating applications. With the use of a hydraulic slip ring in combination with the rotary actuator, the entire rotary actuator can be continuously rotated at high speed while applying forward or reverse torsional loading. This combination, with proper accessories, can simulate both continuous rotation and torque for testing components such as drive-shafts and transmissions. Contact MTS for additional information.

MTS manufactures three sizes of single vane rotary actuators which have 270° rotation and hydrostatic bearings to react internal side loads.

Ordering Information

The standard Series 215 Rotary Actuator assembly includes the actuator, ADT, servovalve manifold, flange adapter, and flexure foot mounting. The following optional equipment is also available:

- Diaphragm flexure
- Reaction bracket
- Reaction base
- Torque Cell

Contact MTS for any optional requirements not listed above. Servovalves, torque cells, and differential pressure transducers are separate products with their own model numbers and product specification sheets.

Related Products

Refer to the following MTS Product Specifications for information on products that are commonly used in conjunction with the Series 215 Rotary Actuator:

- Series 252 Servovalves
- Series 256 Servovalves
- Models 660.22 and 660.23 Differential Pressure Cells
- Series 633 Reaction Torque Sensors

MTS Systems Corporation
14000 Technology Drive
Eden Prairie, MN 55344-2290 USA
Toll Free: 1-800-328-2255
Fax: 1-952-937-4515
E-mail: info@mts.com
www.mts.com

ISO 9001 CERTIFIED QMS

Specifications subject to change without notice.
MTS is a registered trademark of MTS Systems Corporation. RTM No. 211177.
© 2007 MTS Systems Corporation.
100-007-528a 215RotaryActuator Printed in U.S.A. 10/07